Kauri Ciak Table

SKU: RIMO20-601-Kauri Ciak Table

Table with top in solid Kauri, combined with a geometric base made of calendered iron, whose design is inspired to the cinematographic film.

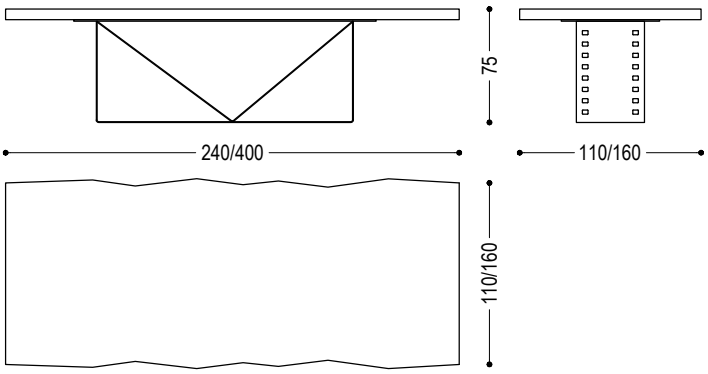

Kauri top drawing for illustrative purposes only

www.mondocollection.com
info@mondocollection.com

mondo

Wood Finishes

A10

Metal Finishes

B2

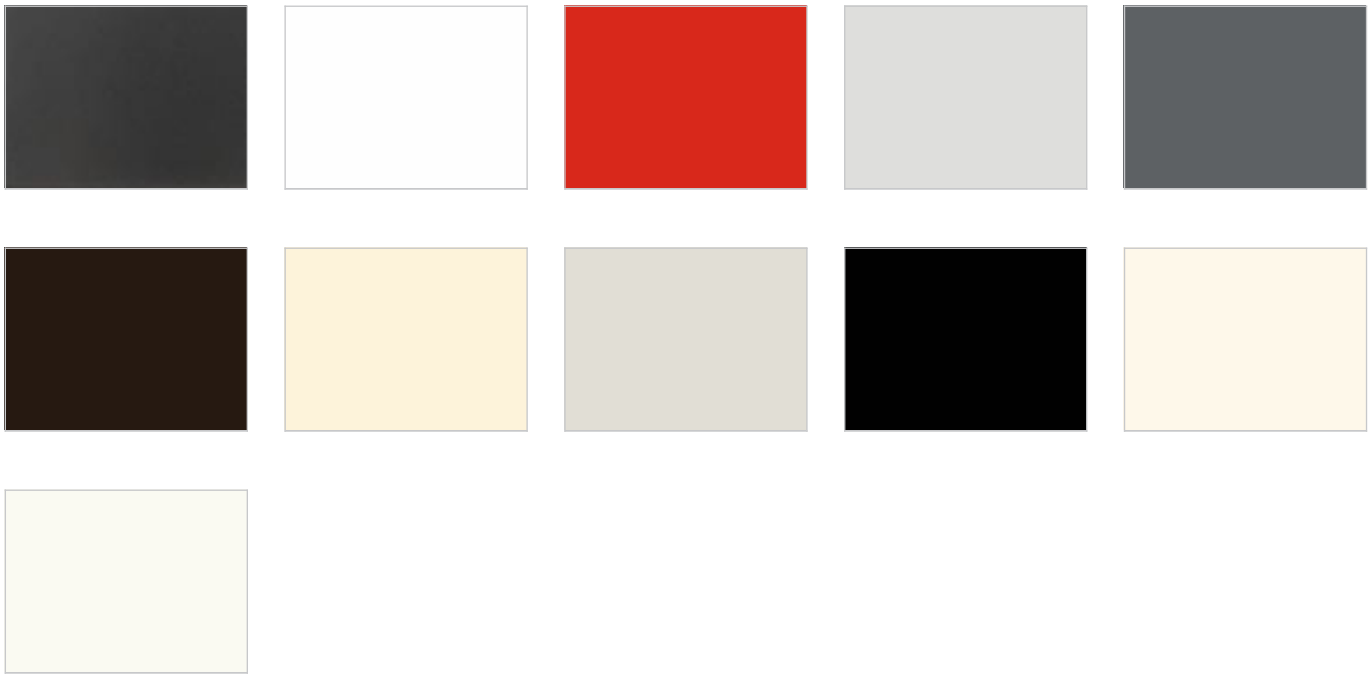

B3

www.mondocollection.com
info@mondocollection.com